MID COAST CRANES

FREIGHTLINER ARGOSY PRIME MOVER
FREIGHT KING DROP DECK TRAILER
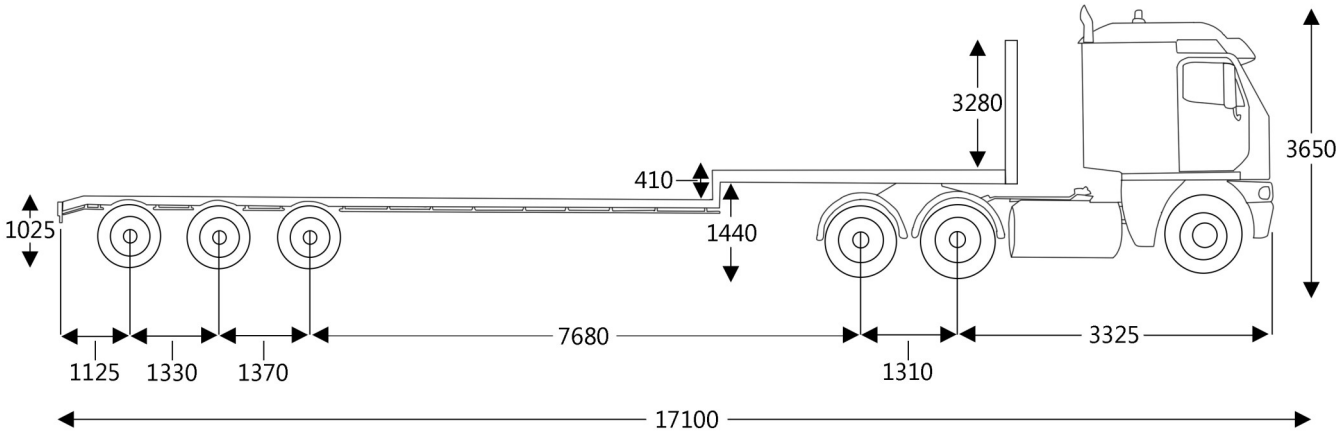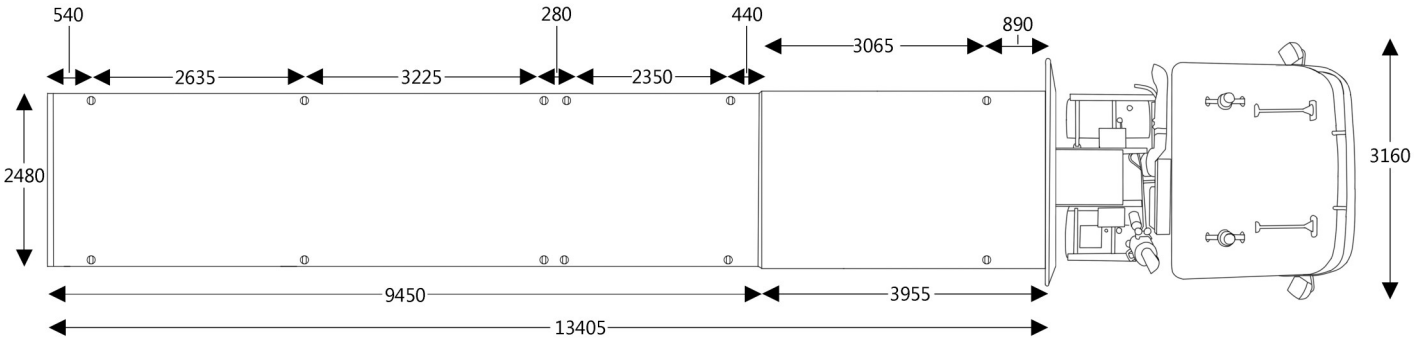
FREIGHTLINER ARGOSY PRIME MOVER
FREIGHT KING DROP DECK TRAILER