Mid Coast Cranes

IVECO STRALIS RIGID TRUCK
HIAB HIDUO 258 EP-5

Mid Coast Cranes

Iveco Stralis Rigid Truck
Hiab HIDUO 258 EP-5

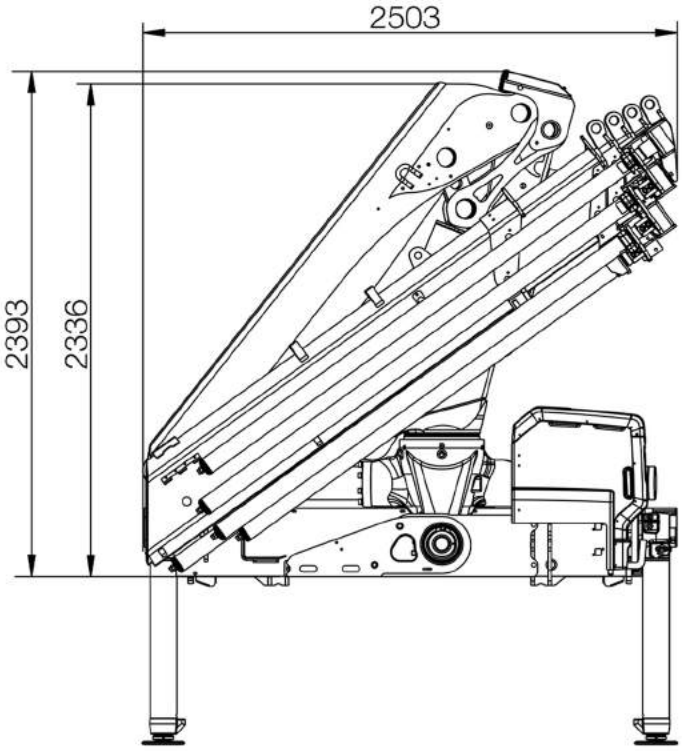

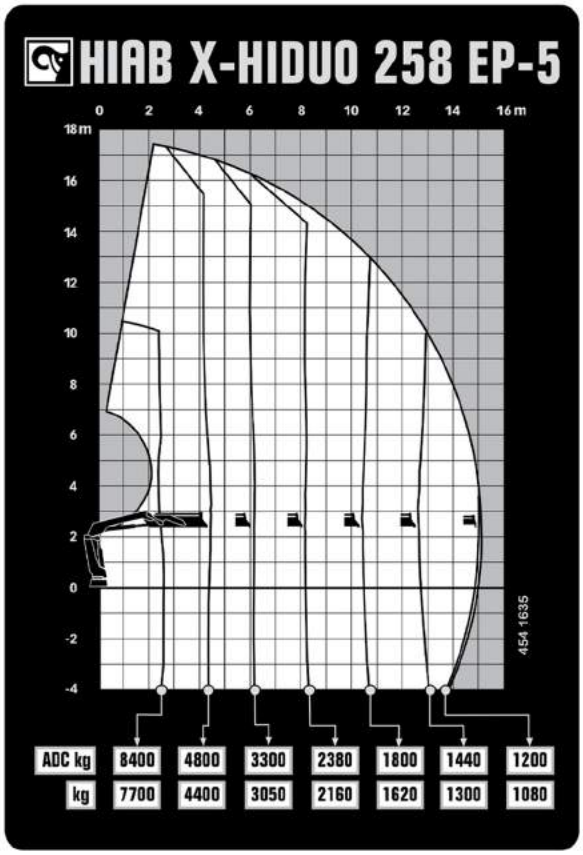

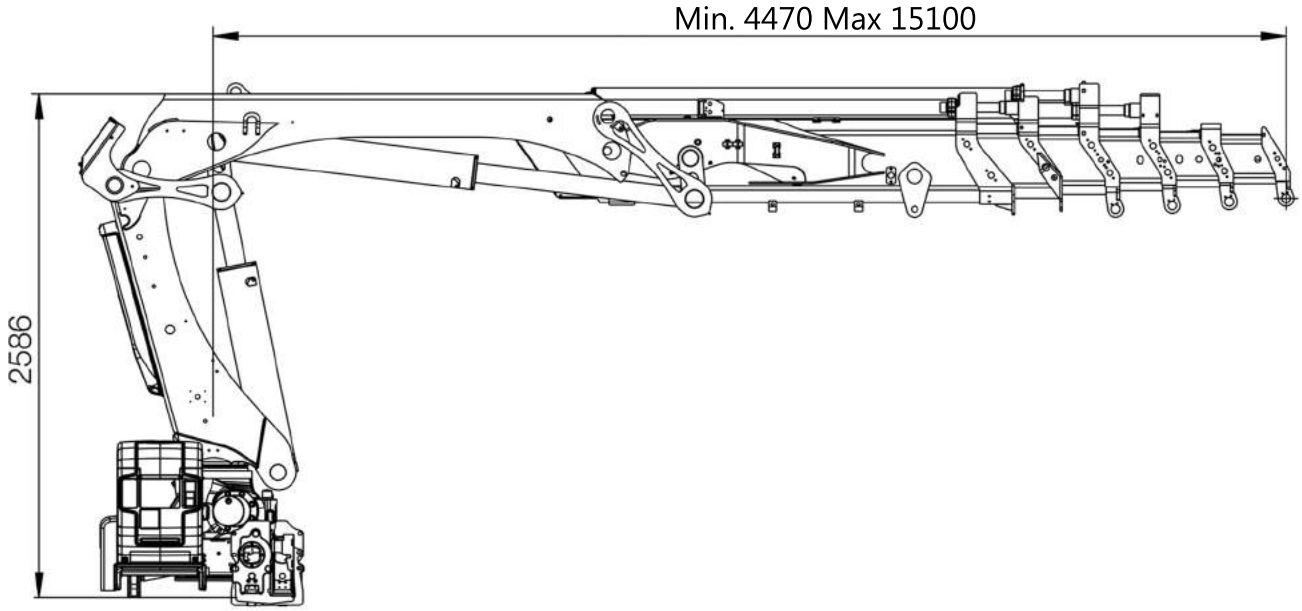

Mid Coast Cranes
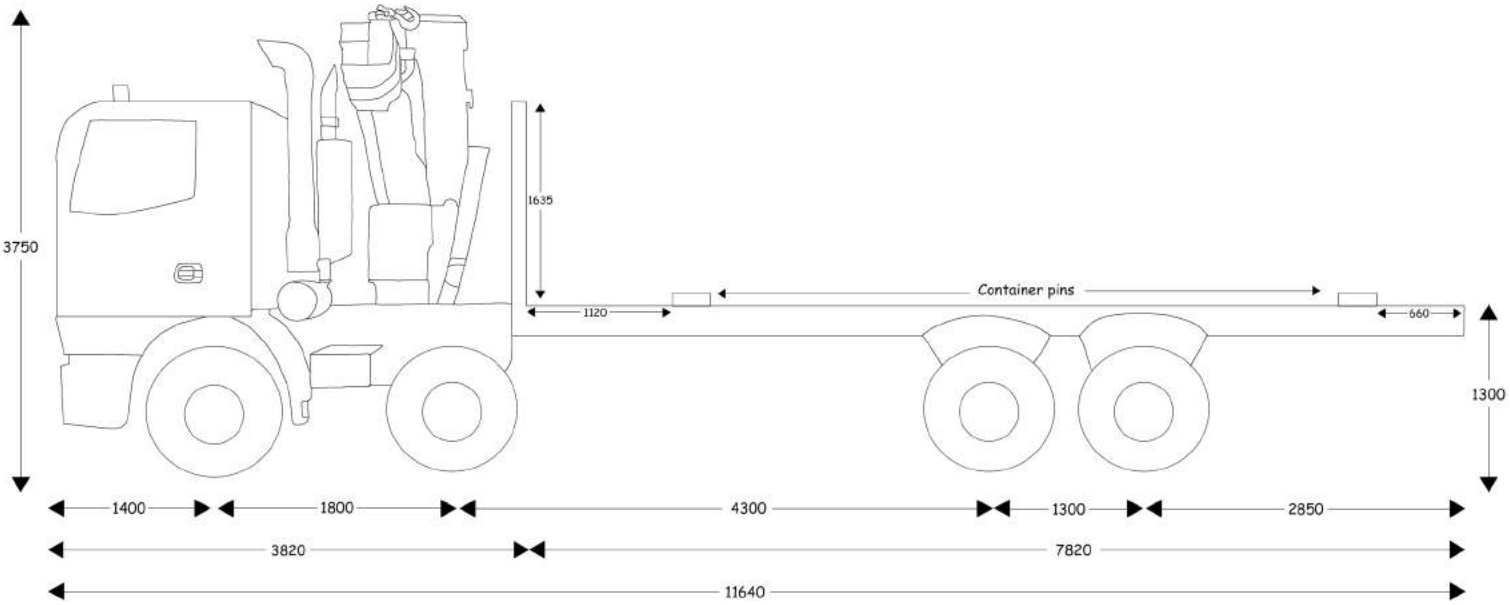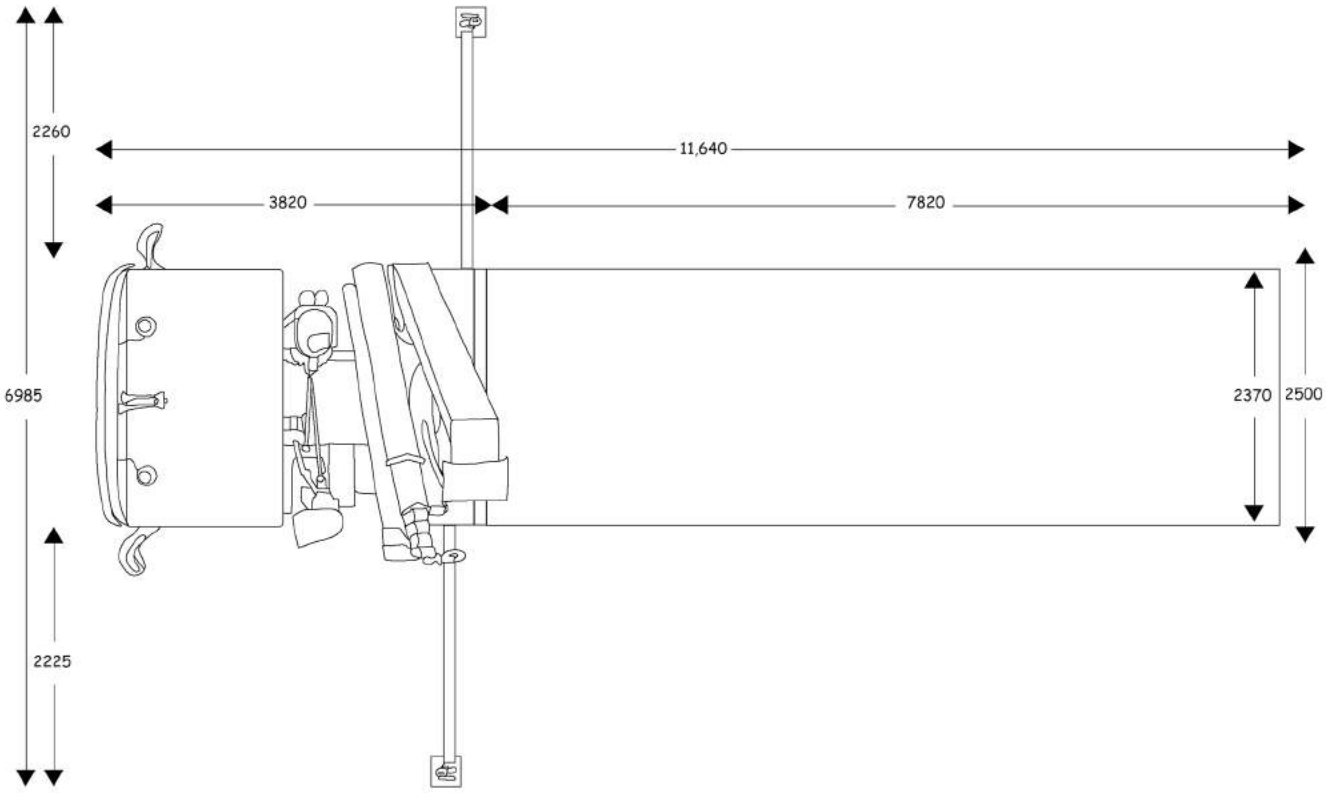
Iveco Stralis Rigid Truck
Hiab HIDUO 258 EP-5